LCLF-B02 Pancake Load Cell

Characteristics & Usage:

Compact structure, high comprehensive accuracy, good long-term stability, high quality alloy steel surface nickel plating

Reaction kettle, hot and cold hydraulic press, electronic universal testing machine, servo electric bar press mounting machine, all kinds of weighing apparatus, automatic assembly industry, force measuring direction and hopper scale.

Dimensions（mm）:

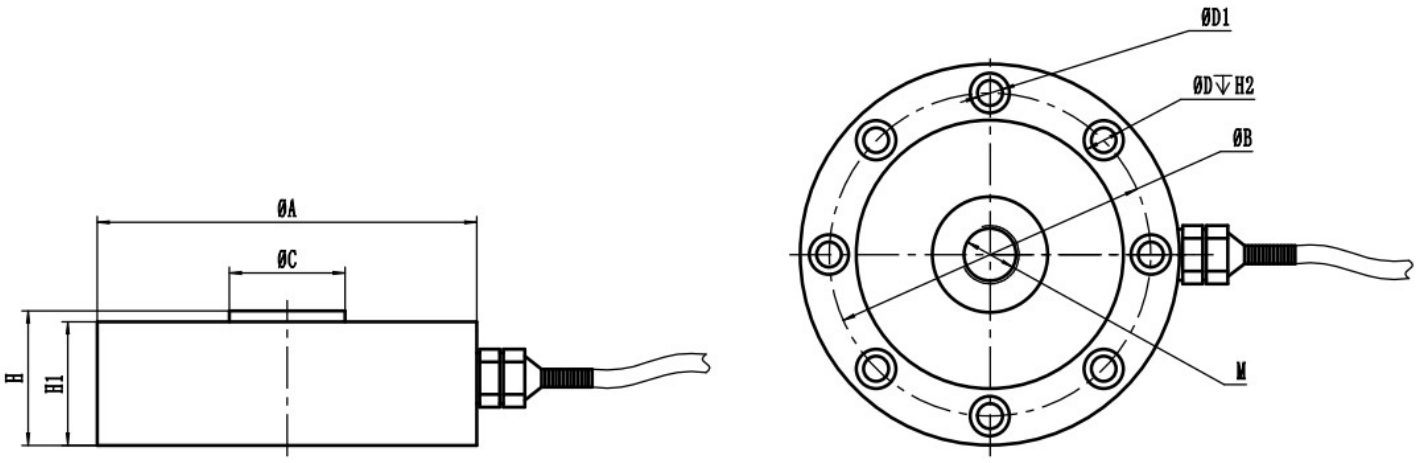

Capacity	ΦA	ΦB	ΦC	M	H	H1	H2	ΦD	ΦD1
100-1000kg	74	63	24	M16*1.5	34	30	7.2	8-Φ9	8-Φ6
1-8t	105	89	29	M16*1.5	37	34	7.2	8-Φ11	8-Φ7
10-20t	120.6	101.8	39	M32*1.5	53.5	41	10.5	8-Φ14	8-Φ9
30t	141	116.8	50.4	M40*1.5	57.2	50.8	11	8-Φ18	8-Φ11
40-80t	208	174	95	M64*3	70	*	15	16-Φ20	16-Φ13
100-250t	280	230	136	M76*3	90	*	20	16-Φ30	16-Φ17
300-450t	360	300	190	M100*3	110	*	20	20-Φ40	20-Φ25
500-600t	420	370	266	M130*4	1140	*	30	20-Φ42	20-Φ28

Sensor wiring diagram

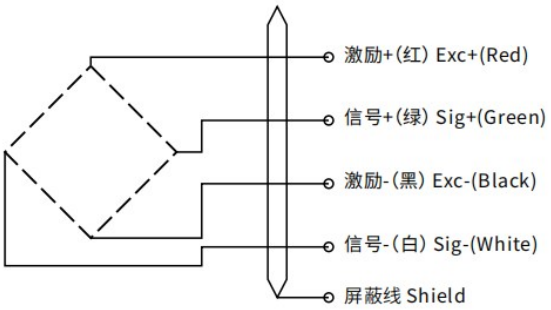

Force diagram

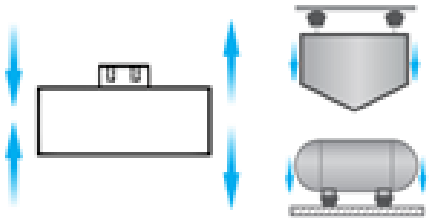

Technical parameters

量程 Capacity	0-500T	材质 Material	合金钢 Alloy Steel
输出灵敏度 Rated Output	2.0±10%mV/V	阻抗 Impedance	20-1000kg： 700/1400Ω 1-30T: 700Ω 50-500T: 1400Ω
零点输出 Zero Balance	±1% F.S.	绝缘电阻 Insulation	≥5000MΩ/100VDC
非线性 Non-linearity	0.05% F.S.	使用电压 Recommended Excitation	5-15V
滞后 Hysteresis	0.05% F.S.	工作温度范围 Operating Temp range	-20~80℃
重复性 Repeatability	0.03% F.S.	安全超载 Safe Load Limit	150%
蠕变（30 分钟） Creep (30 Min)	0.03% F.S.	极限超载 Ultimate Load Limit	200%
温度灵敏度漂移 Temp Effect on Output	0.03% F.S. /10℃	电缆线规格 Cable Specifications	Φ5*3m
零点温度漂移 Temp Effect on Zero	0.03% F.S. /10℃	线缆极限拉力 Cable ultimate pull	10kg
响应频率 Response frequency	10kHz	TEDS Optional 可选	