LCTSC S Type Load Cell

Characteristics & Usage:



It has the advantages of bi-directional tension and compression, compact structure, high comprehensive precision, good long-term stability and nickel plating on the surface of high-quality alloy steel.

Universal material testing machine, hopper scale, hook scale, packing scale, belt scale, plug-in force tester and other tension and pressure testing instruments as well as automation equipment.

Dimensions（mm）:

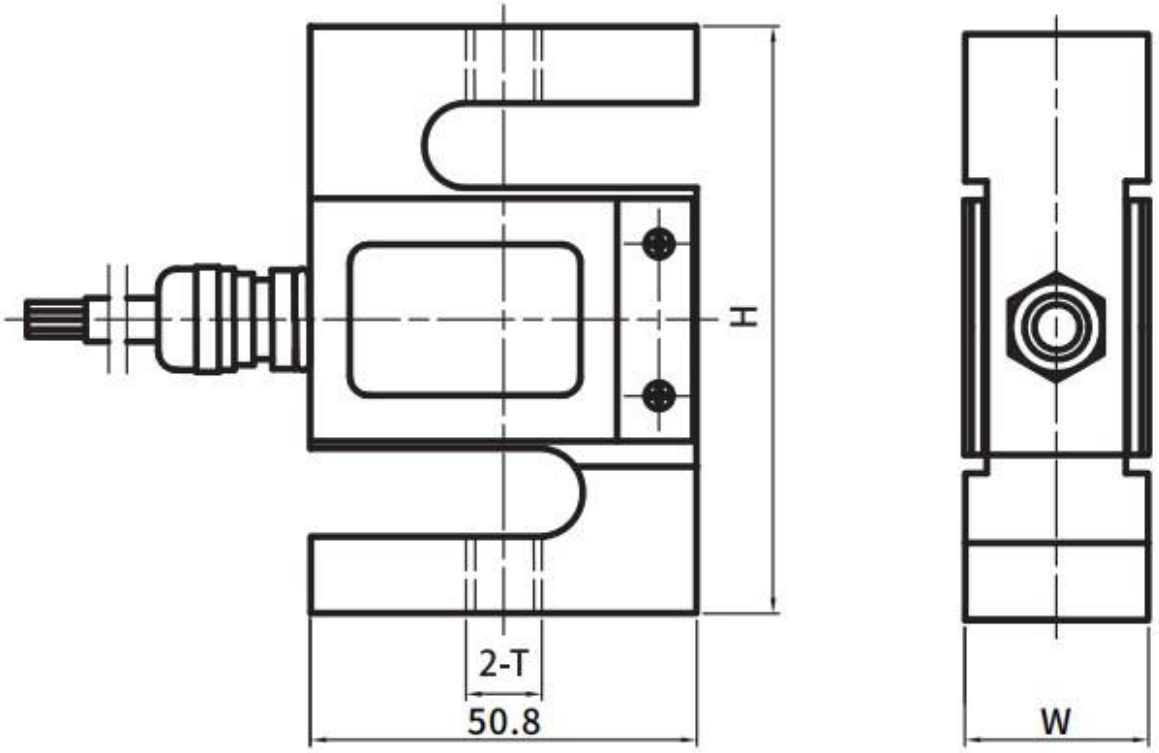

Capacity(kg)	W	T
50,100,200	18.5	M10*1
300	24.4	M10*1
500	24.4	M12*1
1000	36	M12*1

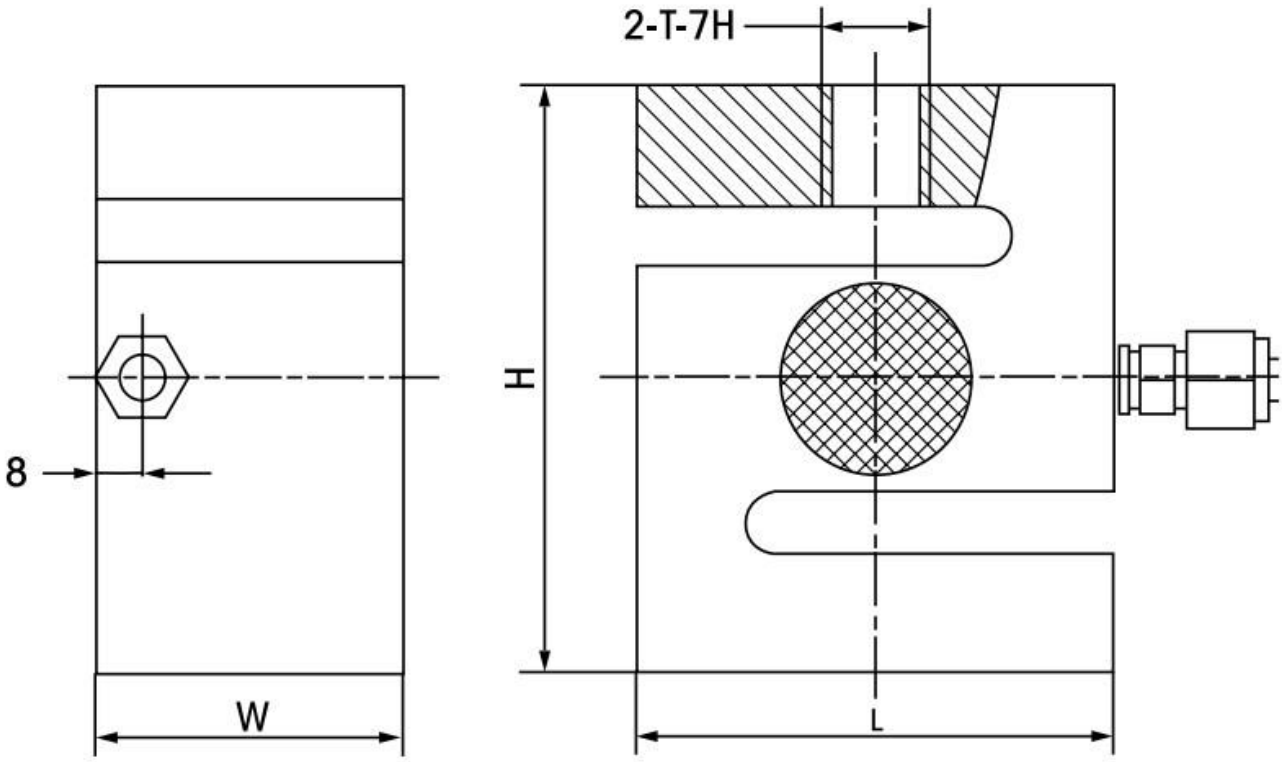

Capacity(kg)	L	H	W	T
2000	70	86	45	M16*1.5
3000	80	100	50	M18*1.5
5000	92	130	58	M20*2

Sensor wiring diagram

Force diagram

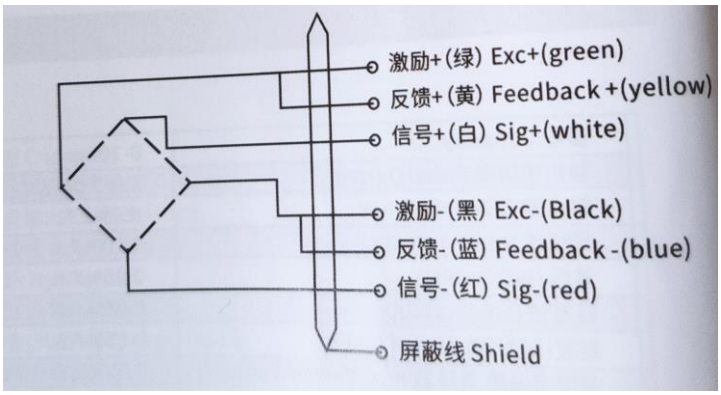

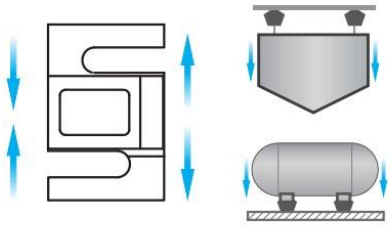

Technical parameters

量程 Capacity	50kg-5T	材质 Material	合金钢 Alloy Steel
输出灵敏度 Rated Output	2.0-3.0±10%mV/V	阻抗 Impedance	350 Ω
零点输出 Zero Balance	±1% F.S.	绝缘电阻 Insulation	≥5000MΩ/100VDC
非线性 Non-linearity	0.03% F.S.	使用电压 Recommended Excitation	5-15V
滞后 Hysteresis	0.03% F.S.	工作温度范围 Operating Temp range	-20~80℃
重复性 Repeatability	0.03% F.S.	安全超载 Safe Load Limit	150%
蠕变（30 分钟）Creep (30 Min)	0.03% F.S.	极限超载 Ultimate Load Limit	200%
温度灵敏度漂移 Temp Effect on Output	0.03% F.S. /10℃	电缆线规格 Cable Specifications	Φ5*6m
零点温度漂移 Temp Effect on Zero	0.05% F.S. /10℃	线缆极限拉力 Cable ultimate pull	10kg
响应频率 Response frequency	10kHz	TEDS Optional 可选	